PETROBRAS	TECHNICAL SPECIFICATION	Nº I-ET-3010.00-5529-854-PEK-001	
	CLIENT	PETROBRAS	SHEET 1 of 17
	JOB	FLEXIBLE RISER SYSTEMS	
	AREA	FLOATING PRODUCTION UNITS	
SUB	TITLE	**MODA RISER MONITORING SYSTEM – FPU SCOPE (SPREAD MOORING)**	NP-1 SUB/ES/EECE/ECE

REVISION INDEX

REV.	DESCRIPTION AND/OR REVISED SHEETS
0	Original - This document is based on the previous technical specification for MODA Riser Monitoring system: *I-ET-3010.00-5529-854-PAZ-005=A*
A	Changes in power supply of MODA system and splice box.
B	Included electrical cables between MODA Cabinet and Splice Boxes

	REV. 0	REV. A	REV. B	REV. C	REV. D	REV. E
DATE	31/03/2020	22/04/2020	17/07/2020			
DESIGN	SUB/ES/EECE/ECE	SUB/ES/EECE/ECE	SUB/ES/EECE/ECE			
EXECUTION	Aires (BYE8)	Renato (Y5UJ)	Renato (Y5UJ)			
CHECK	Renato (Y5UJ)	Aires (BYE8)	Aires (BYE8)			
APPROVAL	Alan (UR6A)	Alan (UR6A)	Alan (UR6A)			

TABLE OF CONTENTS

1. SUBJECT

This document presents the Technical Specification of the FPU (floating production unit) scope of an integrity monitoring system applicable for flexible risers, named as MODA RISER MONITORING SYSTEM. This Technical Specification is applicable only for spread mooring FPU.

2. ABBREVIATION

AC	Alternating Current
APC	Angle Polished Connector
DAU	Data Acquisition Unit
DC	Direct Current
DMZ	Demilitarized Zone
FAT	Factory Acceptance Test
FBG	Fiber Bragg Grating
FO	Fiber Optic
FPSO	Floating Production, Storage and Offloading
FPU	Floating Production Unit
GTD	General Technical Description
I/O	Input/Output
IP	Ingress Protection
JB	Junction Box
LSZH	Low Smoke Zero Halogen
MODA	Monitoramento Óptico Direto no Arame (Optical Monitoring Directly on the Wire)
PBOF	Pressure Balanced Oil-Filled
SIT	System Integration Test
TSP	Twisted Shielded Pair
UPS	Uninterruptible Power Supply
USB	Universal Serial Bus

3. REFERENCE DOCUMMENTS, CODES AND STANDARDS

[1]	Patent EP2489824A2 Scuttle for the monitoring and inspection of a flexible riser.
[2]	IEC 60079-28 Explosive atmospheres - Part 28: Protection of equipment and transmission systems using optical radiation.
[3]	ITU-T G.652 Characteristics of a single-mode optical fibre and cable.
[4]	ITU-T G.654 Characteristics of a cut-off shifted single-mode optical fibre and cable.
[5]	IEC 61892-6 Mobile and fixed offshore units – Electrical installations

4. DEFINITIONS

RISER CONTRACTOR	The company contracted by PETROBRAS to supply the flexible risers including the FBG sensors mounted at the wires inside the spyhole endfitting
FPU CONTRACTOR	The company contracted by PETROBRAS to supply the FPU or the topside scope of the FPU
FPU OPERATOR	The company responsible for the FPU topside operations.
PETROBRAS	Oil operator that uses the MODA system for riser integrity management. Any information to be exchanged with PETROBRAS shall be addressed to the subsea engineering group
MODA OPERATOR	The technical company contracted by PETROBRAS responsible for the support/maintenance of the MODA system during risers life
MAY	Is used when alternatives are equally acceptable
SHOULD	Is used when a provision is not mandatory, but is recommended as a good practice
SHALL	Is used when a provision is mandatory
DRY-MATE [CONNECTOR]	Connector designed for plugging/mating in dry area but is applicable for wet/underwater environments
COVERAGE INTERVAL	Interval containing the set of true values of a measured quantity with a stated probability, based on the information available
COVERAGE PROBABILITY	Probability that the set of true values of a measured quantity is contained within a specified COVERAGE INTERVAL

5. TECHNICAL REQUIREMENTS

5.1. SYSTEM OVERVIEW

5.1.1. PETROBRAS' MODA system uses optical sensors based on Fiber Bragg Grating (FBG) technology to measure strains in the outer wire layer of flexible risers/jumpers, in order to identify broken wires and detect events related to wire ruptures. These FBG optical fiber sensors are located on the top region of the riser/jumper, within the Spyhole End Fitting [1], as illustrated in figure 1.

Figure 1 – Spyhole End Fitting with MODA sensors.

5.1.2. The RISER CONTRACTOR shall be responsible for the supply of the flexible risers/jumpers to PETROBRAS.

5.1.3. The RISER CONTRACTOR shall supply the FBG sensors (attached to the wires inside the Spyhole End Fitting, see Figure 1), cable conduits, optical cables and a submersible dry-mate optical connector mounted at the shoulder of the Top End Fitting body.

5.1.4. The RISER CONTRACTOR shall supply to PETROBRAS the Riser Optical Cable.

5.1.5. The Riser Optical Cable is a 10-meter long optical cable piece (with 8 single mode optical fibers inside a PBOF hose). A subsea dry-mate optical connector (male part

that matches with the connector installed at the Top End Fitting) shall be mounted at one end of the Riser Optical Cable. At the other end of the Riser Optical Cable shall be delivered with an unterminated optical pigtail with a Female JIC 37° ¾" tube fitting mounted at the end of the PBOF. This optical pigtail (as illustrated in figures 2 and 3) shall be spliced or connectorized during the installation offshore inside the Riser Balcony JB at the upper riser balcony.

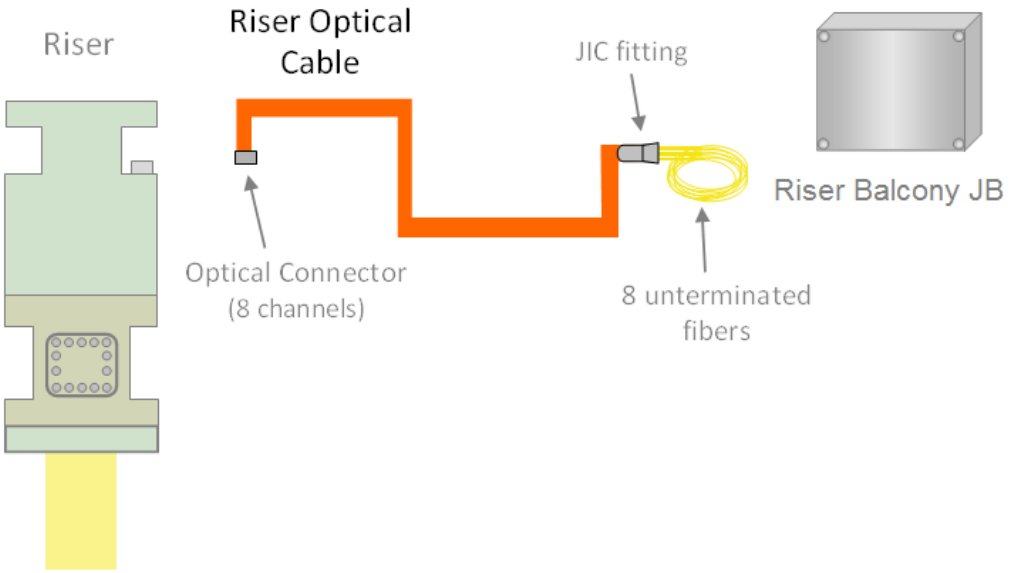

Figure 2 – Riser Optical Cable Schematic.

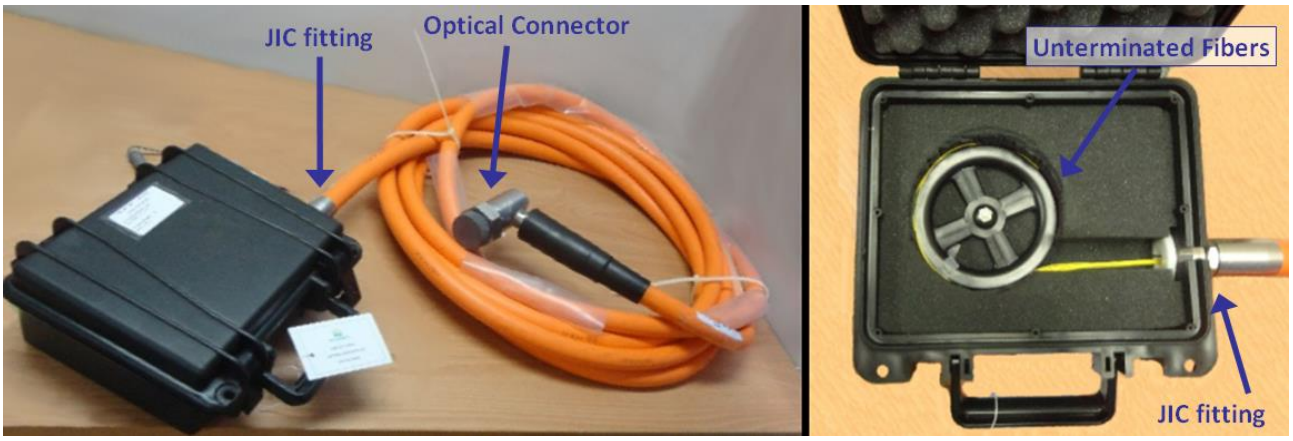

Figure 3 – Riser Optical Cable Picture | Unterminated End Picture.

5.1.6. After the pull-in of each riser/jumper, PETROBRAS shall go on board the FPU, connect the Riser Optical Cable on the riser, lay it on previously installed cable tray, splice/connectorize the fibers of this cable with the fibers of a previously installed Cabinet Optical Cable and protect them on the previously installed Riser Balcony JB. This previously installed optical cable runs from the riser deck directly to the MODA Cabinet(s), located on non-classified and temperature controlled area, as illustrated in figure 4.

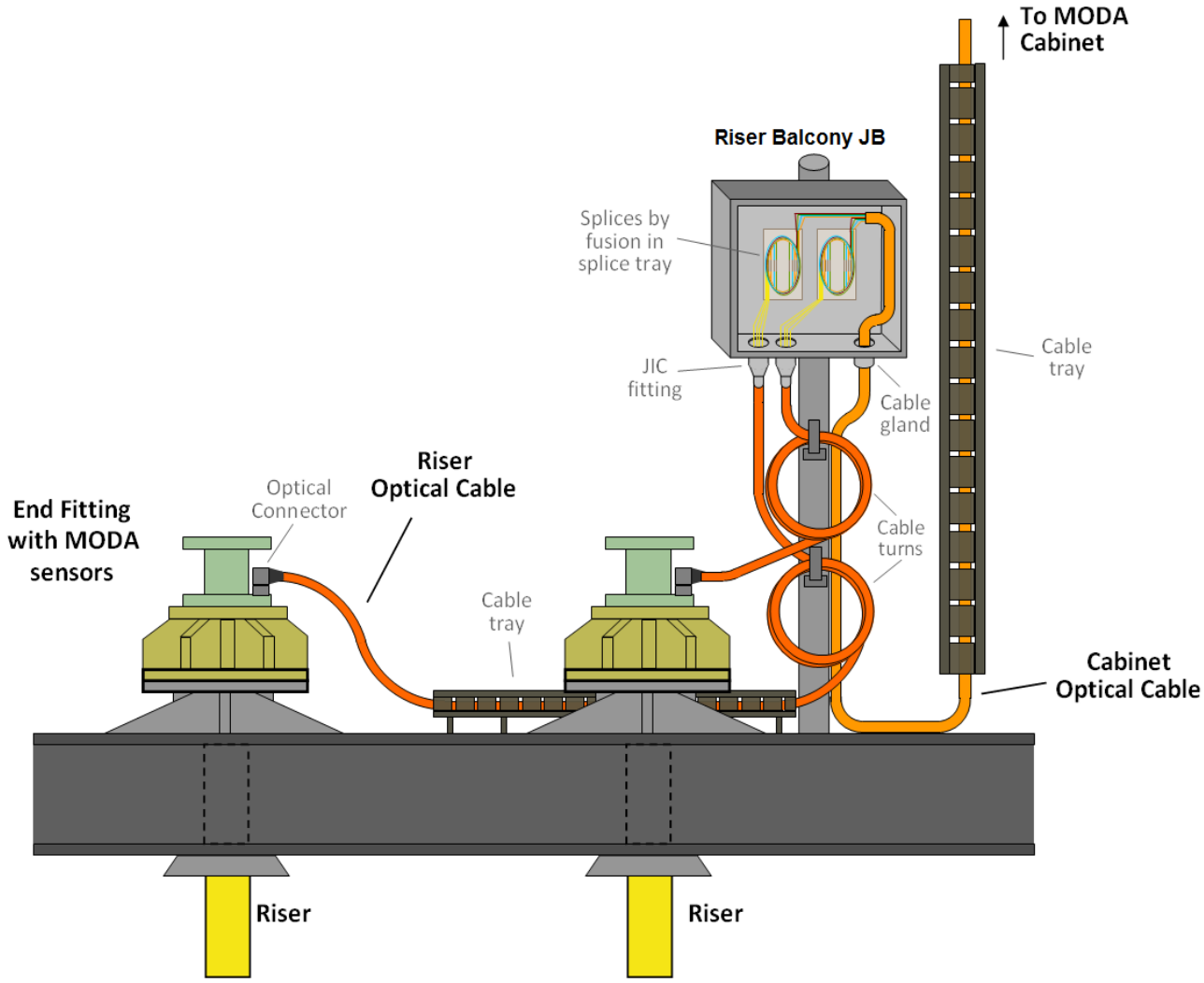

Figure 4 – Sketch of two risers connected to the MODA Cabinet

5.1.7. On the MODA Cabinet, the optical cable is terminated on a FO patch panel and the fibers are connected to a FBG interrogators that reads the sensors installed on the risers. The data collected by the FBG interrogators shall be processed on server computers installed on the MODA Cabinet and transmitted onshore through PETROBRAS Networks (normally DMZ), as illustrated in figure 5.

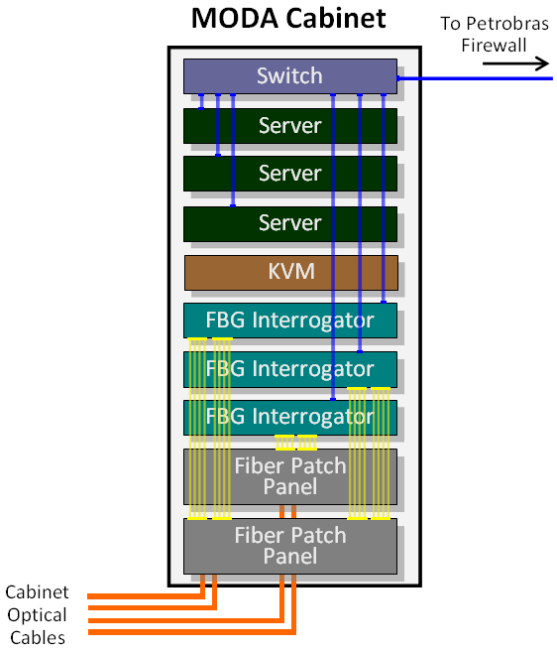

Figure 5 – MODA Cabinet Sketch (for several risers)

5.1.8. The FBG Interrogator specified by PETROBRAS is an inherently safe optical radiation transmitting equipment (Ex op is T4 Ga) as defined on the standard IEC 60079-28 [2], meaning the interrogator shall be located and operated in a safe zone. However, the passive components of the system (optical cables, splices, Riser Balcony JBs, optical connectors and FBG sensors) may be installed and operated in Zone 0, 1 or 2 environments.

5.1.9. As the FBG Interrogator distance range capacity is within some thousand meters, there are no severe limitations on the optical cable path for the MODA System. Other precautions shall be taken in account such as careful observance to the optical cable handling/installation, proper splicing and termination of the fibers.

5.2. MODA SYSTEM LAYOUT

5.2.1. The MODA system layout is closely related to the topside infrastructure for the MODA system, which is in the scope of the FPU CONTRACTOR. There are some layout possibilities and the FPU CONTRACTOR shall propose a layout and submit it for PETROBRAS approval.

5.2.2. Every flexible riser/jumper slots, except umbilical slots, shall be interconnected to MODA Cabinet(s), including production risers, service risers, exportation risers, water injection riser and gas injection risers. Each riser/jumper has 8 optical fibers to be connected and FPU CONTRACTOR shall design the MODA topside infrastructure accordingly. The number of MODA cabinets may vary with the number of flexible risers/jumpers to be connected to the FPU. See item 6.

5.2.3. A splice/junction box is necessary near each riser slot, to connect the Riser Optical Cable with the Cabinet Optical Cable. The length of Riser Optical Cable in the layout

shall be limited to 8 meters to compensate the necessary fiber over length during the cable installation.

5.2.4. The FPU CONTRACTOR has some layout options for the Cabinet Optical Cable and splice/junction boxes. In RECOMMENDED OPTION 1 each riser/jumper has its own splice/junction box and its own Cabinet Optical Cable, which has at least 8 fibers. In RECOMMENDED OPTION 2 each group of 2 nearby risers/jumpers shares a splice/junction box and a Cabinet Optical Cable, which has at least 16 fibers. Figure 6 illustrates the two recommended layout options.

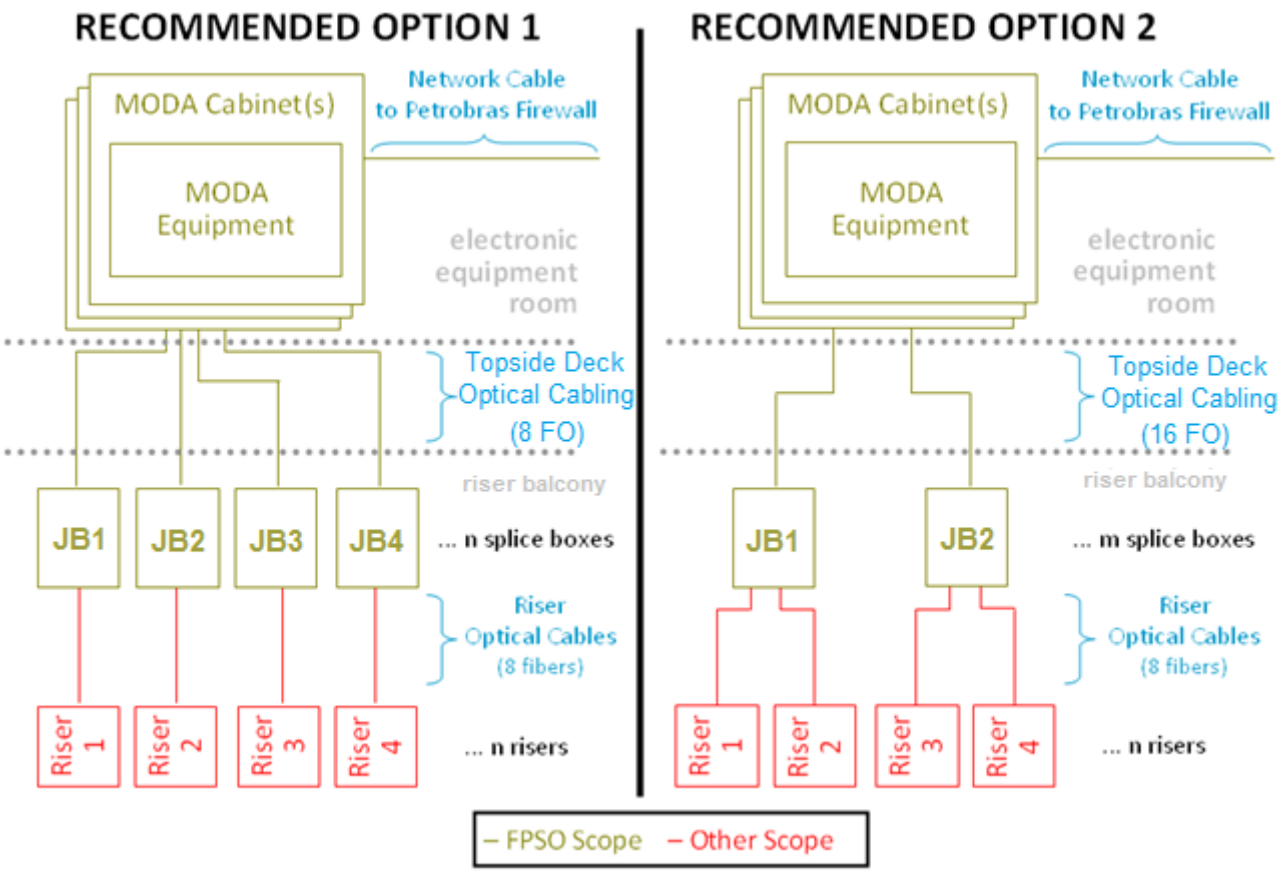

Figure 6 – MODA recommended layout options.

5.2.5. PETROBRAS does not allow grouping more than 2 risers (the Riser Optical Cable length is too short for that) and the use of multi-cables with intermediate splice/junction boxes (adds extra failure points, makes the commissioning more difficult).

.

5.3. MODA CABINET(S)

5.3.1. The FPU CONTRACTOR shall design, supply and install cabinet(s) for the MODA System, as defined on section 6. The number of necessary cabinets may vary with the number of flexible risers/jumpers expected to be connected at the FPU. The MODA cabinet(s) have the following minimum requirements:

- Height: 42 U of rack space (approximately 2000 mm);
- Depth: 1000 mm;
- Width: 800mm;

5.3.2. The cabinet(s) shall be installed at safe and temperature controlled (24 ºC) area.

5.3.3. The cabinet(s) shall be able to house the MODA equipment (19" rack mounted equipment).

5.3.4. Each MODA cabinet shall be interconnected, by two Cat 6 cable, to PETROBRAS LAN cabinet. If cable lengths exceed 90 meters shall be cabled with fiber optic in according with ANSI/EIA/TIA 568-B3. In this case shall be provided optic/Ethernet converters in both sides.

5.3.5. Each cabinet shall be designed for frontal and back access for proper racks/devices installation and for maintenance purposes.

5.3.6. Each cabinet shall be fed by a local UPS supplied by FPU CONTRACTOR. The Local UPS shall be feed by electrical essential bus of FPU and designed to supply all equipment for 30 minutes at least, in case of feeding fail. In case of solution proposed is not possible, FPU CONTRACTOR shall present alternative solution for PETROBRAS approval.

5.3.7. Electrical power consumption (limited to 3kW each cabinet) and heat dissipation shall be calculated by the FPU CONTRACTOR (based on the specifications of the equipment listed on the next session) and submitted for PETROBRAS approval.

5.3.8. The FPU CONTRACTOR shall propose a detailed design of the MODA cabinet(s) and submit for PETROBRAS approval.

5.4. MODA CABINET(S) EQUIPMENT AND ACCESSORIES

5.4.1. The FPU CONTRACTOR shall supply FBG interrogators, server computers, network switch(es), KVM console switch(es) and fiber optical patch panels. The quantity is defined at section 6.

5.4.2. All equipment of the MODA Cabinet with a network port shall be connected to the MODA Cabinet network switch(es).

5.4.3. FPU CONTRACTOR shall ask PETROBRAS to inform IP Address that shall be configured in each equipment.

5.4.4. The FPU CONTRACTOR shall supply cabinet accessories (circuit breakers, surge protectors, power strips, heat dissipation fans, electrical cabling, network cabling, optical patch cords, etc) according to the detailed design of the MODA cabinet(s).

5.4.5. The FPU CONTRACTOR shall install MODA equipment and accessories in the MODA Cabinet. All equipment shall be tested by the FPU CONTRACTOR. Before the test, the FPU CONTRACTOR shall submit the testing procedure for

PETROBRAS approval. After the test, the FPU CONTRACTOR shall submit to PETROBRAS a report with the test results.

5.4.6. The **FBG Interrogators** shall have the following minimum requirements:

- Swept wavelength laser scan frequency: 125 Hz or better (per channel simultaneously);
- Wavelength range: from 1510 to 1590 nm or wider including this range;
- Wavelength scan range: 80 nm or wider (must include the wavelengths from the previous item);
- Optical channels: 16 channels per interrogator;
- Wavelength accuracy: 2 pm or better;
- Wavelength repeatability: 1 pm or better;
- Dynamic range (peak): 21 dB or better;
- Full spectrum measurement;
- Peak detection functionality (at hardware firmware);
- ATEX certification for sensors operation in Zone 0, 1 or 2 environments (Ex op is T4 Ga) as defined on IEC 60079-28 [2];
- SC/APC or LC/APC Optical Connectors;
- Ethernet Port;
- Sensing Analysis Software;
- Rack Mounted or supplied with rack mount kit;
- Height: 70 mm or less.

5.4.7. FPU CONTRACTOR shall submit the technical proposal of the selected FBG Interrogator for PETROBRAS approval before making order.

5.4.8. The **server computer(s)** shall have the following minimum requirements:

- Processor clock: 3 GHz or better;
- Processor cache: 8MB or better;
- RAM memory: 8 GB or better;
- 2 hard disk drives (SSD) of at least 1TB each;
- Support to RAID technology (use RAID-1 at final installation);
- 2 Ethernet ports;
- Operational system: Microsoft Windows with licenses;
- Software: FBG interrogator data acquisition software with all licenses and requirements;
- Rack Mounted;
- Height: 1U.

5.4.9. The **network switch(es)** shall have the following minimum requirements:

- Gigabit Ethernet ports to accommodate all FBG interrogators and servers computers from the MODA Cabinet.
- Support Spanning Tree Protocols, Virtual Local Area Networks, Link Aggregation, Flow Control, Class of Service, Remote Access, Simple Network Management Protocol, Remote Network Monitoring;
- Rack Mounted;
- Height: 1U.

5.4.10. The **KVM console switch(es)** have the following minimum requirements:

- LCD KVM (Keyboard, Video, Mouse) console integrated with KVM switch
- Enough ports to accommodate all server computers/FBG interrogator(if applicable) in the MODA Cabinet
- Minimum of 8 inputs
- Rack Mounted
- Height: 1U

5.4.11. The **fiber optic patch panels** have the following minimum requirements:

- SC/APC optical connectors
- Enough connectors to terminate every optical fiber from the risers (8 fibers per riser), according to the MODA System layout.
- Rack Mounted

5.4.12. The **optical patch cords** have the following minimum requirements:

- The length and optical connectors of the optical patch cords shall allow the individual connection of the FBG Interrogator channels (SC/APC or LC/APC Connectors) to any fiber patch panel (SC/APC Connectors) of the MODA Cabinet(s).
- The FPU CONTRACTOR shall supply one optical patch cord per FBG Interrogator optical channel (*i.e.* 16 optical patch cords per FBG interrogator).

5.4.13. The **FBG sensors array** have the following minimum requirements:

- The FBG sensors array shall be supplied from the same manufacturer of the FBG Interrogator;
- The FBG sensors array shall have a minimum of four (4) FBG sensors at the optical fiber;
- The FBG sensors array shall be used in the pre-commissioning of MODA Cabinet and for troubleshooting purposes (inside the cabinet or on riser balcony). It shall be stored on a rack mounted drawer in the MODA Cabinet(s).
- The FBG sensors array shall have the same type of connector of the FBG Interrogators (SC/APC or LC/APC connectors).

5.4.14. The Local UPS shall have the following minimum requirements:

- Input: 220VAC 50/60Hz (from essential electrical bus);
- Output: 220VAC 50/60Hz;

- Autonomy: 30 minutes in case of feeding fail;
- The UPS shall have the capacity to turn off the output by external signal;
- FPU CONTRACTOR shall consider the consumption of each equipment inside each cabinet in order to design the UPS capacity.

5.5. TOPSIDE DECK CABLING

5.5.1. The Cabinet Optical Cables interconnect the MODA cabinet(s) to the splice/junction boxes at the riser deck. These optical cables are supplied and installed by the FPU CONTRACTOR, with the following requirements:

- Number of fibers: As many fibers as necessary (8 fibers per riser), according to the system layout proposed by the FPU CONTRACTOR and approved by PETROBRAS;
- Fiber type: standard single mode fibers (ITU-T G.652 or ITU-T G.654);
- Water blocked;
- Flame retardant (100% LSZH).

5.5.2. The Cabinet Optical and electrical Cables shall be installed in cable trays, also supplied and installed by the FPU CONTRACTOR, respecting the cable minimum bending radius. The optical cables shall withstand any mechanical loads that may be imposed on installation and operation, including tensile and crush loads.

5.5.3. PETROBRAS recommends the cable to be tight buffered configuration (non-gel filled), breakout construction. PETROBRAS also recommends the outer sheath to be orange.

5.5.4. The FPU CONTRACTOR shall submit the chosen optical and electrical cables specification for PETROBRAS approval.

5.5.5. The FPU CONTRACTOR shall follow the handling/installation recommendations from the optical cable manufacturer to avoid broken fibers and excessive attenuation in the fibers. After the installation of the Cabinet Optical Cables, the FPU CONTRACTOR shall test these cables for continuity / insertion loss. Cables with broken fibers or excessive attenuation are not going to be accepted and shall be replaced. Before the test, the FPU CONTRACTOR shall submit the testing procedure for PETROBRAS approval. After the test, the FPU CONTRACTOR shall submit to PETROBRAS a report with the test results

5.5.6. FPU CONTRACTOR shall also install electrical cables (for future use) between MODA Cabinet and splice/junction boxes, with the following requirements:

- Number of conductors per riser: 2 Twisted Shielded Pairs of 1,5mm2 + 2 Cores of 4mm2;
- One cable for shielded pairs conductors and another one for single cores;
- Flame retardant (100% LSZH)

5.5.7. The electrical cable of item 5.5.6 shall be terminated (inside MODA cabinet and splice junction box) with properly SAK Blocks.

5.6. BALCONY SPLICE/JUNCTION BOX(ES)

5.6.1. The splice/junction box is the interface between the Cabinet Optical Cable and the Riser Optical Cable. FPU CONTRACTOR shall design/supply/install this component of the MODA system in an area with easy access on the upper riser balcony. The FPU CONTRACTOR shall terminate Cabinet Optical Cable inside this splice/junction box.

5.6.2. The connection between riser and splice/junction box is PETROBRAS scope, however FPU CONTRACTOR shall provide the infrastructure to lay/protect/fix the Riser Optical Cable (i.e. balcony cable trays – item 5.7).

5.6.3. The splice/junction box shall have enough splice trays to accommodate every optical fiber from the optical cables (*e.g.* A splice/junction box for two risers shall be able to accommodate at least 16 splices).

5.6.4. The splice/junction box and its accessories shall be adequate to be installed in hazardous area (Zone 1 – Ex e type). The Splice/Junction box shall be sealed against dust and powerful water jets (IP 66).

5.6.5. The splice/junction box body material shall be AISI 316L.

5.6.6. The FPU CONTRACTOR shall supply/install cable glands for the Cabinet Optical Cable at the splice/junction boxes.

5.6.7. For each Riser Optical Cable to be connected to the corresponding splice/junction box, according to the system layout, the splice/junction box shall have two 3/4 inch outside diameter male 37°flare tube fitting (37º JIC size 12) (reference: SS-1210-6-12AN). Since the Riser Optical Cable shall only be installed offshore, each male 37° flare shall be protected with a matching female metal cap.

5.6.8. The FPU CONTRACTOR should design the splice/junction box with a removable plate on the underside with three (7) inlets: Two (2) inlets with through holes for the JIC tube fitting (described at item 5.6.7); one (1) cable entry for unshielded optical cable; two (2) cable entry for electrical cable from MODA Cabinet; and (2) two inlets (with protective plug) for electrical cable for future use.

5.6.9. The FPU CONTRACTOR shall submit the chosen splice/junction box, cable glands, tube fittings and other accessories specifications for PETROBRAS approval.

5.6.10. When the FPU CONTRACTOR installs the Cabinet Optical Cable on the corresponding splice/junction box, it is necessary to leave at least 2 meters of cable over length inside the splice/junction box. The over length allows a proper splice without mechanical stress, which is relieved by turns inside it. The over length also allows future rework in case of damaging the splices during MODA operation offshore.

5.6.11. The information necessary to purchase the splice/junction box (Cabinet Optical Cable diameter, number of cables, numbers of splices, installation procedure) are defined by the FPU CONTRACTOR. The information about the Riser Optical Cable is described on the section 5.7.

5.6.12. The splice/junction boxes shall be installed in place adequate to provide access to maintenance during MODA operation offshore.

5.6.13. FPU CONTRACTOR shall terminate all fibers in splice box temporarily in SC/APC connectors, in order to apply commissioning system in shipyard. FPU CONTRACTOR shall maintain the splice trays requested in 5.6.3, once the fibers will be fusion by PETROBRAS in offshore.

5.6.14. FPU CONTRACTOR shall terminate all electrical conductors in Splice/junction box with SAK blocks adequate to be installed in an Ex e junction box.

5.6.15. Splice/junction box shall have enough space to accommodate all internal components (SAK Blocks, Splice Tray, Optical Connectors, etc).

5.7. BALCONY TRAY(S) FOR THE RISER OPTICAL CABLE

5.7.1. Cable trays between the riser slot and the splice box shall be supplied to lay/protect/fix the Riser Optical Cable after the riser installation. The FPU CONTRACTOR shall design/supply/install these trays.

5.7.2. The cable tray design shall to take into account the length of the Riser Optical Cable, including bends and at least 2 meters of over length for fiber splicing.

5.7.3. The Riser Optical Cable is a component of the MODA system supplied by the RISER CONTRACTOR and installed by PETROBRAS/MODA OPERATOR in cooperation with the FPU OPERATOR with the following specifications:

- Maximum Length: 8 m;
- Number of fibers: 8 single mode fibers (ITU-T G.652 or ITU-T G.654);
- Water blocked, flame retardant (100% LSZH);
- Nominal outer diameter: approximately 30 mm;
- Minimum Bending Radius: 150 mm.

6. SCOPE OF SUPPLY

6.1. MODA CABINETS

6.1.1. FPU CONTRACTOR shall supply MODA cabinets in quantity to attend all flexible

risers of FPU. Each cabinet can attend the maximum of 12 risers.

6.1.2. For each group of up to 3 (three) flexible risers, FPU CONTRACTOR shall supply one (1) set of FBG Interrogator & Server Computer (with all accessories like: optical patch cords, power cables, PSUs, etc).

6.1.3. Each MODA cabinet shall also contain at least:

- (x1) bipolar circuit breaker
- (x1) bipolar surge protector
- (x1) rear and front lighting lamps with opening door switches
- (x1) rackmount 10 outlets power strip with Brazilian standard
- (x2) 48-port Fiber Optical Patch Panels;
- (x1) FBG sensors array;
- (x1) 24-ports Network Switch;
- (x1) KVM connected to all servers/interrogators(when applicable) inside the same cabinet;
- Fiber Optical Patch cords to connect all fibers to FBG interrogators (see item 5.4.12);
- (x12) 10m Fiber Optical Patch cords (spare);
- (1x) UPS (if applicable);

6.1.4. When more than one cabinet shall be supplied, FPU CONTRACTOR shall also:

- Install them side by side, with side/bottom access between cabinets;
- Provide network (Cat6) spare cables (at least 6) interconnecting them, terminated in properly Ethernet Patch Panels;

6.2. SPLICE/JUNCTION BOXES

6.2.1. FPU CONTRACTOR shall supply at least one splice/junction box for each riser, as detailed in item 5.2. Alternatively, FPU CONTRACTOR can supply one splice/junction box for each group of two flexible risers, if the length needed to connect the box with the risers do not exceed 8 meters long.

6.2.2. FPU CONTRACTOR shall provide the infrastructure (cable tray) to PETROBRAS run the Riser optical and electrical cables (see item 5.7).

6.2.3. Shall not be acceptable intermediate connections between balcony splice/junction boxes and MODA cabinets.

7. INSTALLATION AND COMMISSIONING REQUIREMENTS

7.1. SYSTEM PRECOMMISSIONING TESTING

7.1.1. Pre-commissioning tests shall be performed with the purpose of verifying interfaces

between components and proper operation of the system as a whole.

7.1.2. All mechanical, electrical, instrumentation and automation interfaces shall be functionally tested.

7.1.3. All system operation modes (and combinations thereof, when multiple components are involved) shall be tested with the aim of ensuring proper long-term, stable operation.

7.1.4. The system integration test shall be performed with the actual components of the system.

7.1.5. Before the installation of the MODA infrastructure on the FPU, the FPU CONTRACTOR shall submit the tests procedures of the infrastructure for PETROBRAS approval, including:

- MODA cabinet equipment and accessories test procedures, specially FBG interrogators;
- Optical cables test procedures (including OTDRs and FBG sensor arrays).

NOTE: PETROBRAS recommends the use OTDR to check fiber optic channels integrity (FO connectors/cabling/optical splices) for MODA sensors operation. Typical measurements to check optical integrity are an optical insertion loss (OIL) better or equal to 1.5dB @1550nm and an optical return loss (ORL) better or equal than -50dB @1550nm.

7.1.6. Before the test execution, the FPU CONTRACTOR shall submit the test schedule to PETROBRAS.

7.1.7. After tests execution, the FPU CONTRACTOR shall submit to PETROBRAS the test reports.

7.1.8. In case of corrective actions for identified nonconformities and, eventually, new tests, the FPU CONTRACTOR shall submit to PETROBRAS the updated test reports.

7.2. COMMISSIONING REQUIREMENTS

7.2.1. In terms of Acceptance Test, the FPU CONTRACTOR shall evidence, at least:

- Cabling and power supply in each MODA Cabinet;
- Certification of all network cables related to MODA System;
- Connectivity test between equipment and PETROBRAS corporative network;
- OTDR test of all optical fibers;
- Fully test of the system (FPU CONTRACTOR scope), using the FBG sensor array connected to each fiber at each splice box;
- UPS discharge test (if applicable).

8. DOCUMENTATION REQUIREMENTS

8.1.1. During the detailed design done by the FPU CONTRACTOR and before the procurement of any material in the FPU CONTRACTOR scope of supply, the FPU CONTRACTOR shall submit for PETROBRAS approval the design documents and equipment model specifications, including:

- MODA System Layout;
- Network/Logical topology of MODA equipment;
- MODA cabinet(s) drawings and schematics;
- MODA cabinet(s) power and heat estimates calculations;
- Cabinet Optical Cable datasheet;
- FBG interrogator datasheet;
- Server computers datasheet;
- LCD KVM console datasheet;
- Network switch datasheet;
- Fiber patch panels datasheet;
- Splice/junction box drawings and datasheet;
- Splice/junction box cable glands drawings and datasheet.
- Splice/junction box tube fittings drawings and datasheet

8.1.2. During de executive design shall be issued to PETROBRAS approval a Technical Proposal of the FPU CONTRACTOR scope, including Datasheets, manuals and certificates for all equipment/cabling supplied by FPU CONTRACTOR.

8.1.3. After the final pre-commissioning of the MODA infrastructure the FPU CONTRACTOR shall submit to PETROBRAS the MODA System databook, including:

- Documentation informing which fiber of which riser is connected to which patch panel and FBG Interrogator;
- Updated version (as-built) of documentation submitted during detailed design phase;
- Model and serial number of installed equipment on the MODA Cabinet;
- Final test reports.